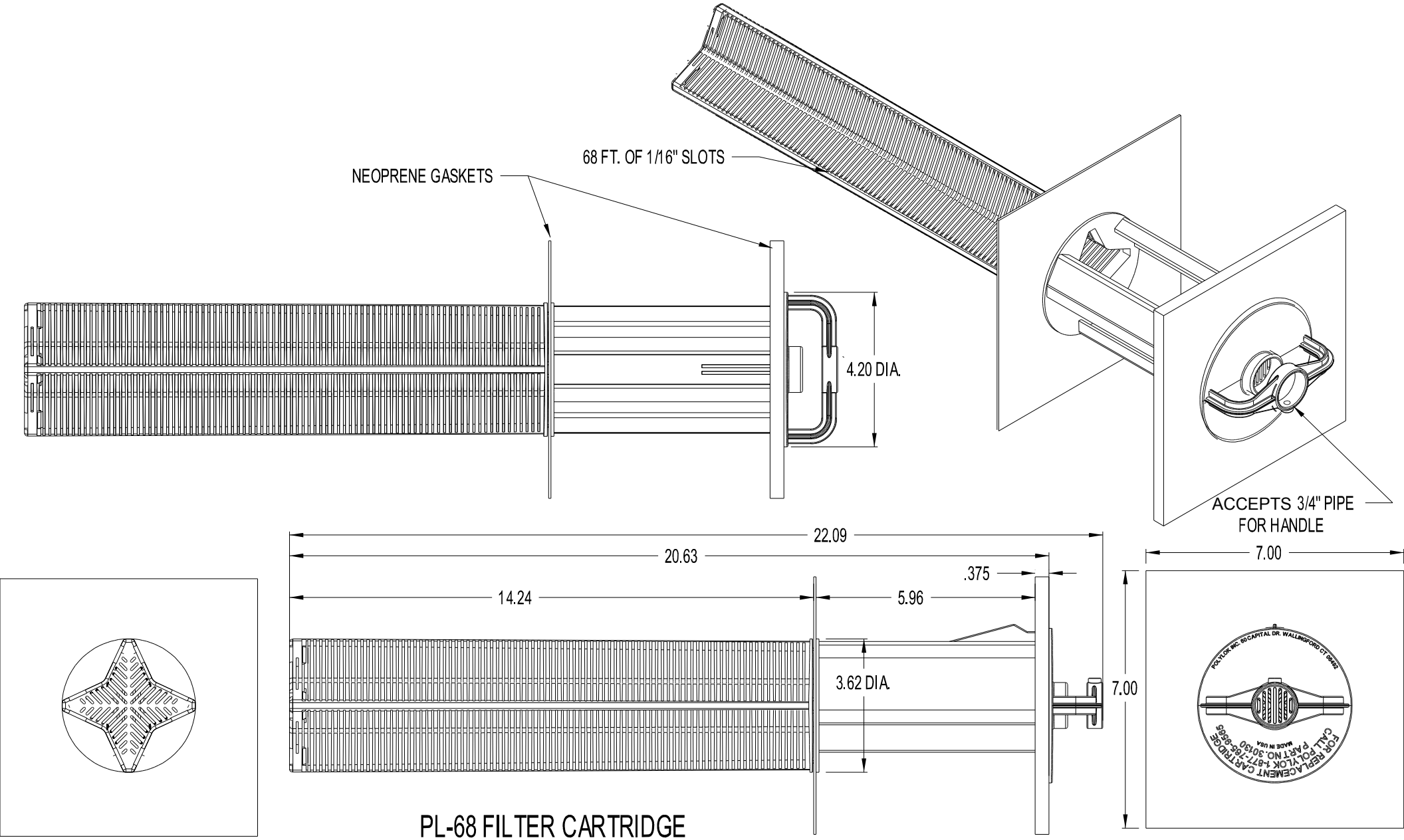

PL-68 FILTER CARTRIDGE
PART NO. - 30130-CB
MATERIAL - POLYPROPELYENE